ERSATZTEILLISTE
OKIJET 2010

M-OSD-10018-10

ERSATZTEILLISTE OKIJET 2010

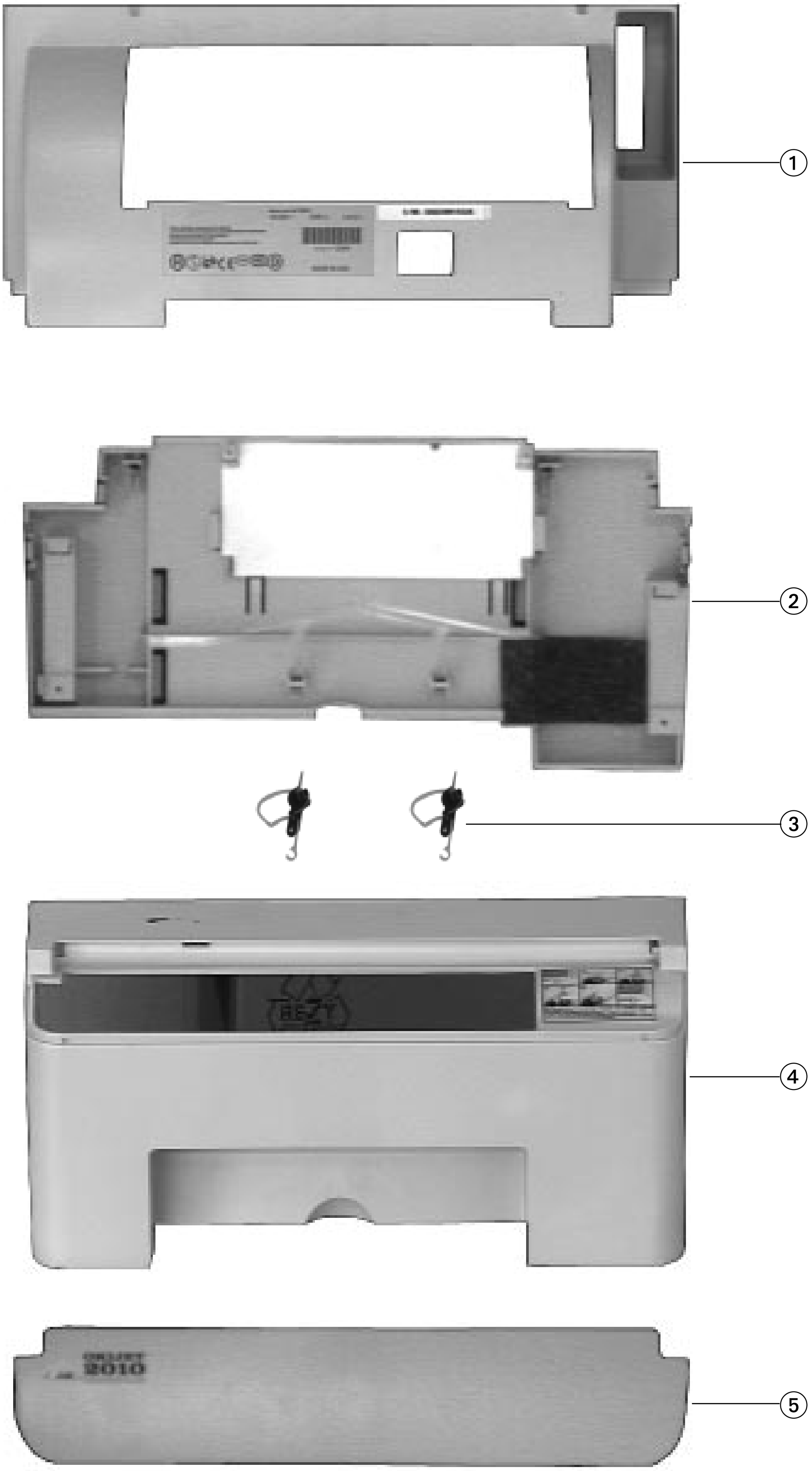

6

7

8

9

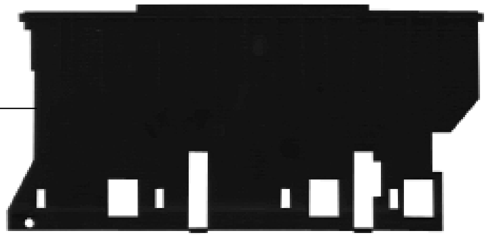

10

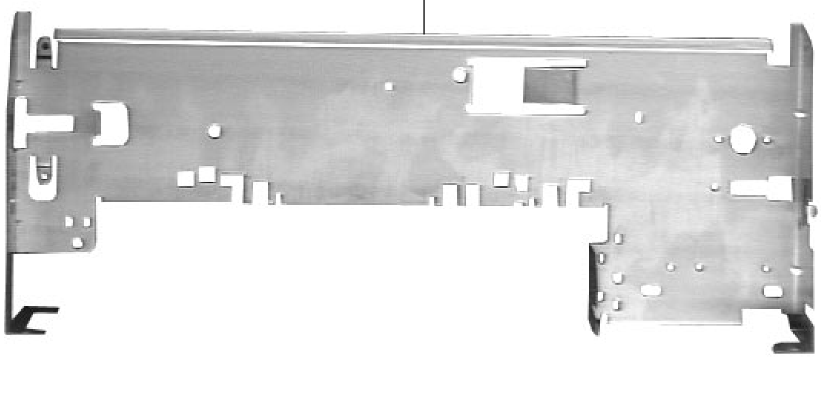

11

⑫

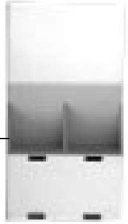

⑬

⑭

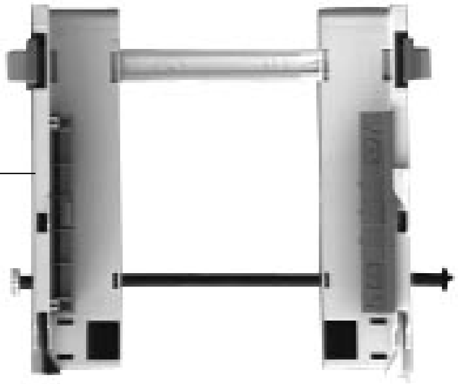

⑮

⑯

⑰

⑱

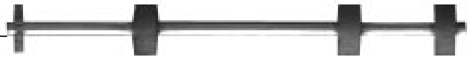

⑲

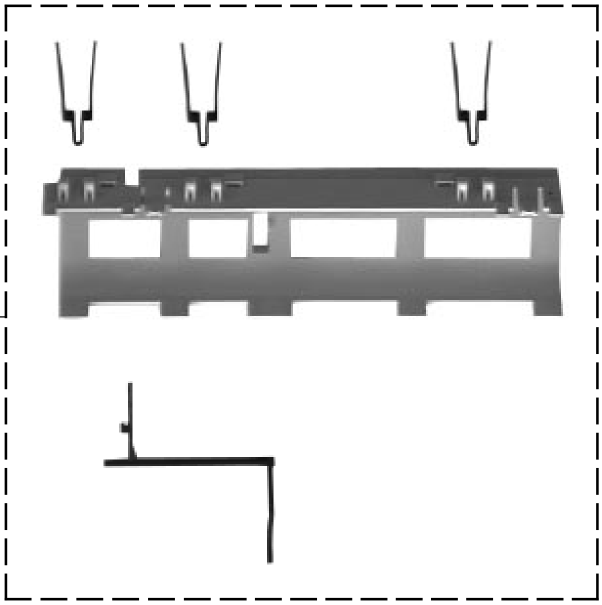

㉑

⑳

22

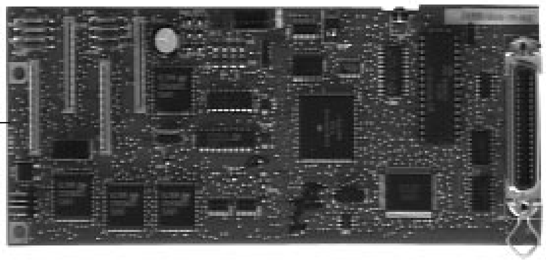

25

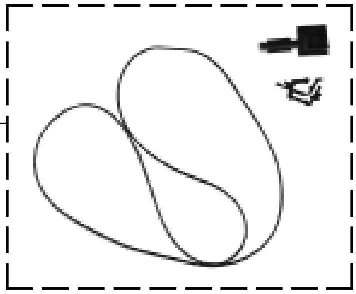

23

26

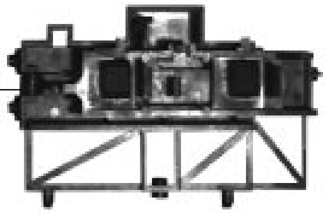

24

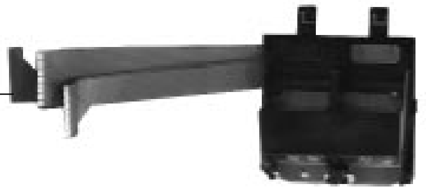

27

NR.	BEZEICHNUNG	BESTELL-NR.
1	REAR COVER	69G4118
2	BASE	69G4115
3	EJECTOR ARM	69G4129
4	FRONT COVER ASSY	69G4116
5	ACCESS COVER	69G4160
6	FRAME (L) INCL. GEARS	69G4120
7	FRAME (R)	69G4121
8	PAPER FEED MECHANISM	69G4125
9	MID FRAME	69G4123
10	CARRIER FRAME	69G4122
11	CARRIER TRANSPORT MOTOR	69G4158
12	UPPER SUPPORT	69G4131
13	BACK PLATE	69G4169
14	GUIDE ASSY R + L	69G4166-67
15	PAPER LOAD DOOR	69G4164
16	TRAY	69G4165
17	PICK ROLL HUB ASSY	1367463
18	LARGE FEED ROLLER	69G4124
19	PAPER GUIDE INCL. SPRING	69G4128
20	EXIT TRAY	69G4115A
21	SMALL FEEDER + PAPER FLAP	69G4126
22	MAIN PCB W/O ROM	69G4132
23	POWER SUPPLY	69G4133
24	PRINTH.CARRIER ASSY (INCL. CABLE)	69G4154
25	CARRIER BELT INCL. TENSION	69G4159
26	MAINTENANCE ASSY	69G4186
27	ENCODER STRIP	69G4162
28	ACCESSORY PACK	69G4188